ALT.NO	ALT.DATE	ZONE	ALTERATIONS	AUTHORITY
a	29/06/2006	NIL	1. ITEM-6,7 AND 8 ADDED AND ITEM-2 DELETED.	MD060031
b	08/07/2006	NIL NIL	1. ITEM-8 ADDED. 2. QPA OF ITEM-6 WAS 2.	MD060031
M1	07 04/15		IN BOM, IN P3 DRG NO. CHANGED ECN NO. 90000063	
M2	05 05/20		IN DRG P.9,10,11 , COL -1 & II ADDED IN BOM AND DRG. DRG REVISED	DS SMR

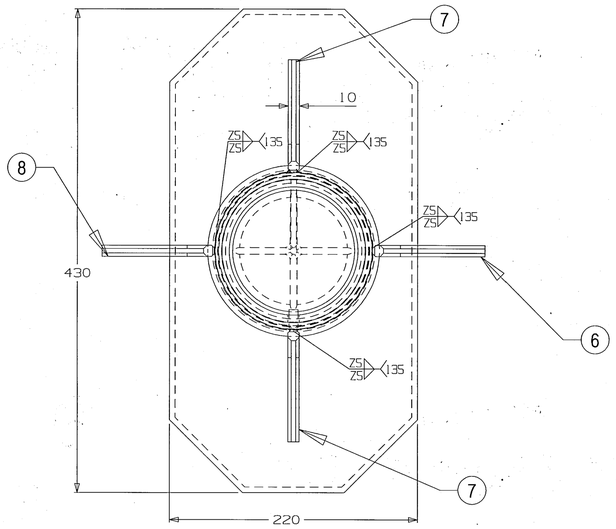

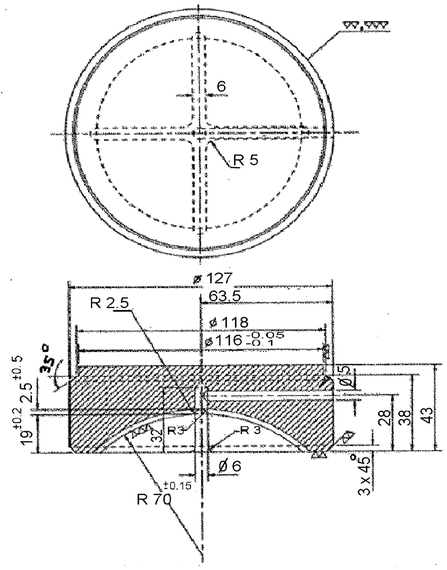

P.10

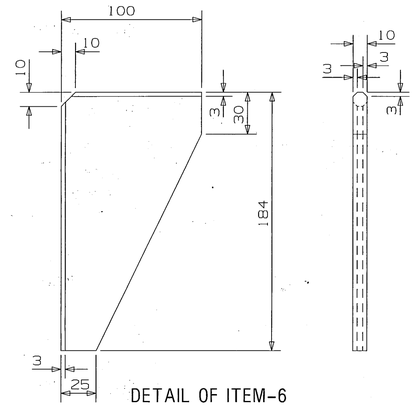

DETAIL OF ITEM-6

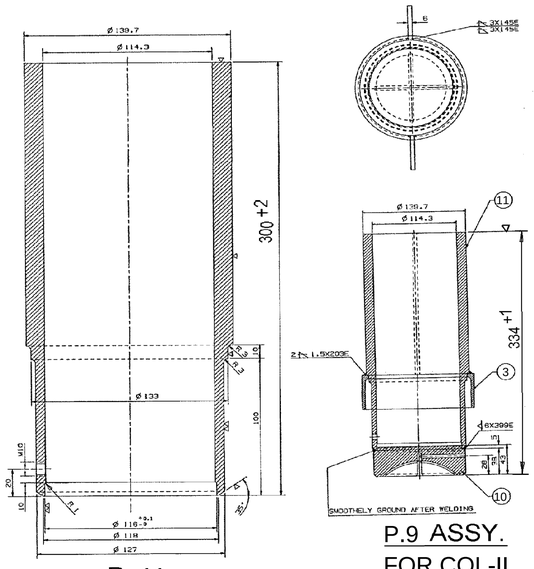

P .11

P.9 ASSY.
FOR COL-II

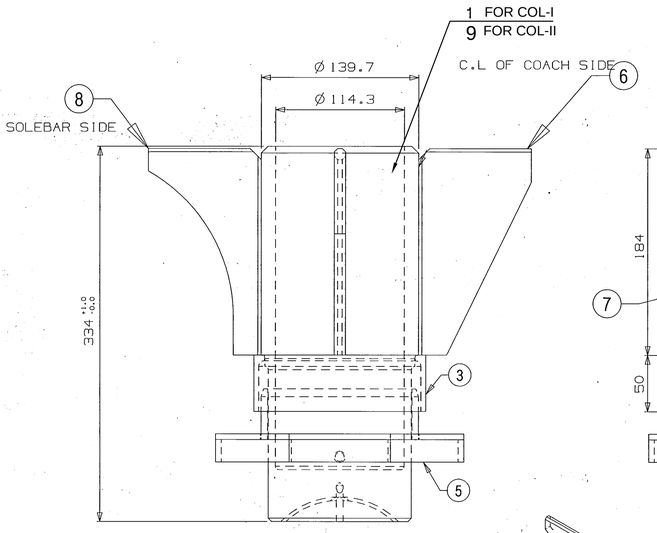

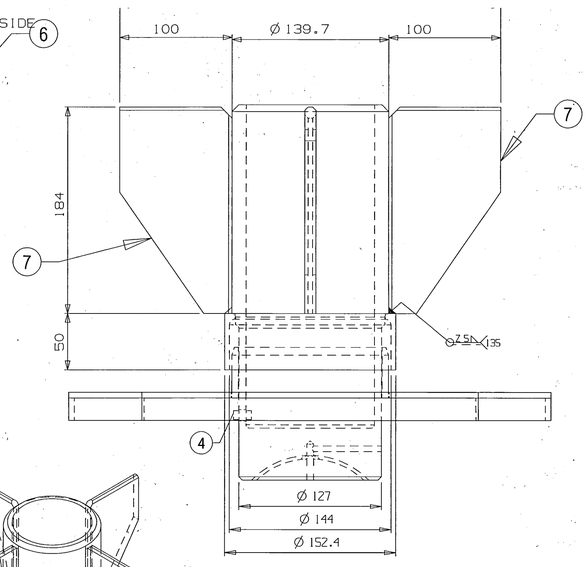

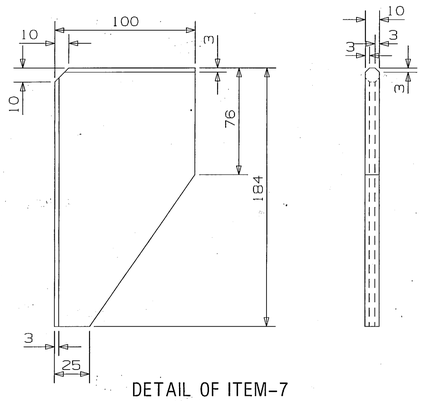

DETAIL OF ITEM-7

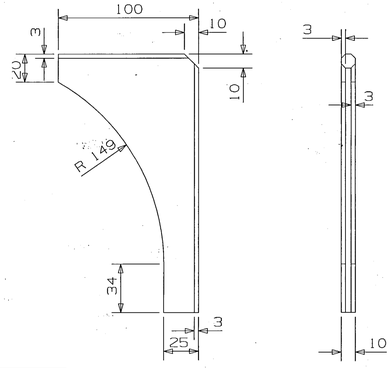

DETAIL OF ITEM-8

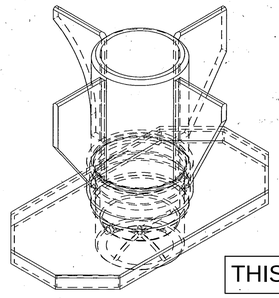

THIS DRAWING IS ONLY FOR OUTSOURCING.

M2	11	TUBE Ø139.7X12.7X300	1	-	C101233130	IS:1161-98 HFS YST 210	NIL
M2	10	BEARING PIECE Ø127 X 43	1	-	ICF/STD-1-1-008	IS :1875-92 CL-I	ITEM-4
M2	9	TUBE ASSY (CONSIST OF P.10 ,P.11 & P.3)	1	-	NIL	NIL	NIL
	8	RIB 10X100X184	1	1	R108201010	IS: 2062-99 Fe-410 WC	NIL
	7	RIB 10X100X184	2	2	R108201010	IS: 2062-99 Fe-410 WC	NIL
	6	RIB 10X100X184	1	1	R108201010	IS: 2062-99 Fe-410 WC	NIL
	5	COVER COMPLETE	1	1	~~ICF/STD 1-1-002~~	422-41107-1	~~COL-1,ALT a~~
	4	SLOTTED GRUB SCREW M10X20	-	1	RFS0311020	IS: 2388-71 6.6 TAB 1 & 2 TY-C	GALVD.
M1	3	CAP	1	1	~~ICF/STD 1-1-002~~	422-41105-2	~~ITEM-4~~
	~~2~~	~~RIB~~		~~2~~	~~ET11131~~	~~NIL~~	~~NIL~~
	1	SIDE BEARER TUBE	-	1	ET11129	NIL	NIL
	ITEM	DESCRIPTION & DIMENSIONS	COL-II	COL-I	DETAIL DRG	MATL. & SPEC.	REMARKS

WELD LENGTH	NIL M
WEIGHT	22.500 KG
S.AREA	NIL M²
~~LENGTH/DIA~~	NIL M
~~WIDTH/THICK.~~	NIL M
HEIGHT	NIL M

GROUP	UNDERFRAME
FILE	\\Nas\shell\prdp\et11130B.prt (3D)
SUPERSEDES:	ET11130 ALT a

SIDE BEARER COMPLETE

RAIL COACH FACTORY, KAPURTHALA

INDIAN RAILWAYS STANDARD

SCALE	1:2.5	SSE/REC	
CHD		DRN	
REF.DRG.No.	ET11100 ALT-b		
PL NO.	NIL		
DRG.NO.	ET11130 M2		
ALT.	b	SIZE	A1
SHEET	1/1		

ADE/SME DY.CME CDE

ANY MANUAL ALTERATION SHALL AUTOMATICALLY RENDER THIS DRAWING INVALID.

FOR UNTOLERANCED DIMENSIONS REFER MDG0008

DETAIL DRGS STARTING WITH "LI" ARE INTERNAL REFERENCE LISTS ONLY AND ARE NOT FOR ISSUE.

DATE OF FIRST ISSUE 12/06/2000 CGM BY